Installation Instructions

12x150mm Clic Herringbone Oak

Furlong Flooring®
First choice flooring for every room

PLEASE NOTE:

Herringbone Flooring is a professional product and requires a high degree of technical ability to be installed correctly. We always recommend a qualified and experienced professional should be responsible for installing this product.

PRE INSTALLATION

Herringbone Flooring is a natural product and a minimum 48 hour period of acclimatisation is required to ensure the best possible results. However, the warranty conditions dictate that the Engineered Wood Flooring is to remain in the sealed packaging before the date of installation.

SUBFLOOR PREPARATION

This type of flooring is suitable for installation on most types of flooring substrate, as long as its clean, dry and level, e.g. sand and cement screeds, timber floorboards, chipboard, plywood are all suitable). It is the responsibility of the flooring installer to check that the site condition is in a satisfactory state for the installation to take place including all moisture related readings.

Concrete & Screed Subfloors

It is vital that the installer checks the moisture content of the concrete/screed to satisfy themselves that it is dry enough for the flooring to be installed. If measured directly with an appropriate moisture meter, the moisture content should not exceed 4% on a non-destructive moisture meter such as Tramex / Gravemetric weight percent measurement (2.5% CM for Concrete screed / 0.5% CM for Anhydrite screed) and the relative humidity of the air over the floor screed and should be between 45-55% R.H. @ a temperature of 18-21ºC.

The floor screed must be leveled before installation to a tolerance of no more than a 3mm gap showing under a 3m straight edge.

Timber Subfloors

Floorboards, O.S.B and Plywood, are all suitable sub floors for Herringbone Flooring. This product is **NOT** suitable for installation directly onto joists or battens. Additional preparation is required to ensure an even and solid base to install your herringbone flooring onto.

If your sub floor uses chipboard, we recommend stabilising this using a minimum of 6mm plywood before installing your Engineered Wood Flooring. The same level tolerance of 3mm applies.

Please Note: If installing on existing T&G flooring, make sure all old floorboards are secure and free of infestation'. We also recommend that your new flooring is installed at a 90º angle to the previous T&G flooring, this provides the necessary stabilisation required should any subsequent movement of either of the timbers should occur.

PRODUCT USE

This Herringbone Flooring can be installed:

- On or above ground level (not suitable for use in basements)
- In well ventilated and dry areas, providing the area falls in line with the Climate Control section of these instructions.
- For optimium performance this product should be installed by Glue-down method of installation (see page 4).
- Over a plywood or concrete subfloor.
- For smaller domestic areas (single room locations below 35m², max 10.0mtr in 1 direction) due to the benefit of the UNICLC system it can be floated over a minimum 2.00mm underlay with moisture inhibitors.

This floor should **NOT** be installed in bathrooms or laundry rooms. Use in either of these applications will void the product warranty. Herringbone Flooring is for indoor use only.

PLEASE READ THESE INSTRUCTIONS COMPLETELY BEFORE BEGINNING THE INSTALLATION.

The following instructions must be used to install Herringbone Flooring. Failure to do so may result in voiding the product warranty.

INSTALLER'S / OWNER'S RESPONSIBILITY

We only use the best natural materials to manufacturer our flooring. As wood is a natural product, you can expect changes in colour, grain and appearance and other visual imperfections between each of the boards - No two planks will have the same characteristics. We manufacture our products by following the accepted industry standard which outlines that defective boards must not exceed 5% of the full pack. These defects may be the result of manufacturing or naturally occurring characteristics of the material.

We recommend that a minimum of 10% for cutting and 5% for visual grading should be added to your total square meterage when calculating the quantity of flooring required.

Please Note: If your room is not of equal proportions, the percentages of waste may be different to what we have outlined above - This is an approximation.

Before the installation begins; it is the joint responsibility of the installer and owner/customer of the site to conduct a thorough site inspection before any flooring is installed.

When carrying out the pre-installation inspection please pay close attention to the following aspects:

- Quality of Manufacturing
- Finish
- Colour Grading

If specific boards are deemed unacceptable, please exclude these boards from the installation process. Boards that remain as

At the time of writing all information is specified correctly. The company reserves the right to change specifications of this product at any time without prior notice to third parties. The photographs used in this document are only intended as a visual references. No rights can be derived from the them.

This product is imported into the United Kingdom under licence from B2BWP (Co. Number: 07996098 / EORI GB 133054942000)

©Copyright 2025

part of the installation are considered to have been accepted by both installer and owner (even if the owner is not present at the time of installation).

It is the sole responsibility of the flooring installer to conduct thorough checks of the site, sub floor, installation tools and materials to ensure they meet or exceed the acceptable industry standards for installing hardwood flooring. We accept no responsibility for problems arising from incorrect or improper site preparation or installation procedures.

SITE PREPARATION:

Before installing your new floor, please ensure that the following points are addressed:

Installation in a new build construction

- Installation of all external windows and doors have been carried out. (This includes doors from the home to attached garages, failure to have these in place can affect the ambient temperature of adjoining rooms.)
- All concrete, masonry, plastering, drywall, texturing, painting and other wet work is complete and thoroughly cured and dry.
- Basements and crawl spaces are dry. Crawl spaces must have no standing water; crawlspaces must also have a vapour barrier and adequate ventilation that meet local building codes.
- Gutters and downspouts are in place, directing water away from the building.
- HVAC systems are fully operational, enabling heat and humidity levels to be controlled and maintained throughout the home.
- The Subfloor has been prepared correctly for installation.

Installation in an Existing Home (renovation)

If you are planning to install Herringbone Flooring in an existing home as part of a home renovation or remodel, the same principles apply to that of a new build construction. Please ensure all wet work (painting, wallpapering, texturing) is completed and thoroughly dry before commencing with the flooring installation.

In addition to the new build principles:

- Remove all furniture, artwork and other valuables from installation area.
- Remove any skirting board and mouldings.
- Undercut door frames
- Remove all existing flooring and underlay, if necessary

UNDERFLOOR HEATING

Most Engineered flooring can be used with water based embedded Underfloor Heating systems, but we recommend consulting your UFH instruction guidelines before installing to ensure the correct system is in place before the wood floor is installed.

The flooring installer should ensure the system has been correctly tested and is operational before commencing the installation of the flooring. Failure to do so can cause additional problems because of the wide range of temperatures the flooring is subjected to.

Always turn off the Underfloor heating system 24 hours prior to installation and allow it to cool fully.

Once the installation is completed, wait 48 hours before turning the system back on, this gives any adhesive used the time to fully cure.

When its time to turn the system back on, do so in small increments of 5°C each day until you reach your desired room temperature. Do **NOT** turn the system straight up to the maximum, as this cause the timber to dry out quickly and cause the floor to split or crack.

Maximum allowed contact temperate should not exceed 26ºC, this is to the base of the board, not the top surface. Please note that loose carpets/rugs insulate the surface by around 2°C!

Important: Follow the heating regulation recommendations given by the underfloor heating system supplier.

CLIMATE CONTROL

Climate control is essential when it comes to wood flooring. The conditions at the job site must be maintained with the air temperature between 18-24ºC and relative humidity at 45-60% before, during and after the installation. The flooring should not be delivered to the site until these conditions have been met and maintained for 1 week for plywood subfloors and 2 weeks for concrete subfloors.

Following the installation, these temperature and relative humidity conditions should be maintained at all times to ensure you get the best out of your new floor. See Warranty for more details.

If the temperature and humidity conditions meet the manufacturer's guidelines, the material should then be delivered to the site. When stacking boxes, ensure that boxes are cross stacked to allow for proper airflow between each box. Do not open the boxes; leave closed until ready to commence the installation and open each one as required when performing the pre-installation checks.

COLOUR RACKING

Real Wood Flooring contains natural variations in colour and grain pattern. To prevent colour grouping or repetitive patterns in the finished floor surface, We recommend unboxing 3/4 cartons to get a sense of the range of colour variation and arrange the planks to achieve a satisfactory appearance. When sorting boards, pay close attention to visible manufacturing defects and any transport damage (if applicable). Once a plank has been installed, these are considered to have been accepted by the customer

At the time of writing all information is specified correctly. The company reserves the right to change specifications of this product at any time without prior notice to third parties. The photographs used in this document are only intended as a visual references. No rights can be derived from the them.

This product is imported into the United Kingdom under licence from B2BWP (Co. Number: 07996098 / EORI GB 133054942000)

©Copyright 2025

and are not eligible for exchange or replacement (See Warranty for more details).

EXPANSION SPACE

Wood flooring expands and contracts with changes in ambient temperature and humidity. To allow for this, during installation please leave an 12mm expansion space around the entire perimeter of the floor between the flooring and the walls. Also leave expansion space where the flooring meets doorways and any vertical obstacle, such as stairs, pipes, tiles and cabinets. These will be covered by skirting boards or scotia's at the end of the installation process.

Please Note: In climates with extreme variations in humidity, or in large installations (+80m²), a larger expansion space may be required.

CLEANING & MAINTENANCE

Once the installation of your hardwood floor is complete, it is essential to ensure you familiarise yourself with the correct and safe ways to clean and maintain the surface to avoid any potential damage.

Daily Cleaning

For day-to-day cleaning, it is essential to dust your hardwood floors with a microfiber mop or cloth each day to prevent any scratches and surface damage. Microfiber cleaning pads use static electricity to trap dirt, particles and other household allergens. Dusting the surface will remove any particles of dust and grit that may appear from footwear, chair legs and will contribute to preventing the floor from long-term damage. Household brushes may also be used, but please be aware that these can push the dirt around and may potentially cause scratches to the surface of the floor.

Weekly Cleaning

On a weekly basis, we recommend giving your hardwood floor a vacuum or damp mop to get rid of more stubborn stains or debris that may have dried onto the surface. Keep any protruding parts of the vacuum away from the surface of the floor as this can cause damage. Any excess water should be removed from the floor immediately and never pour water directly onto the floor's surface as this can cause swelling, warping, splitting and even joint separation and not only reduce your floor's lifespan, it will also most likely void any manufacturers' warranty.

Ongoing Maintenance

For a more in-depth clean, we recommend giving your floor a deep clean 3/4 times per year to ensure the floor is well protected from day-to-day living. As we offer many different types of finishing materials on our flooring, we recommend speaking to your retailer who will be able to advise on the correct maintenance products for your flooring depending on its finish, in accordance with the description on the product end label.

Cleaning Tips & Tricks

- Use a good quality doormat at entrances & exits to avoid dirt and debris entering the home.
- Always use appropriate felt pads on chairs, tables and any other furniture to minimize indentations.
- For drink spillages, these must be cleaned up immediately.
- Avoid using water and vinegar or soap-based cleaners, as these will dull the floor's finish over time.
- Do NOT use Steam Cleaners on your hardwood floors as these also put heat and excessive water on your floor.

At the time of writing all information is specified correctly. The company reserves the right to change specifications of this product at any time without prior notice to third parties. The photographs used in this document are only intended as a visual references. No rights can be derived from the them.

This product is imported into the United Kingdom under licence from B2BWP (Co. Number: 07996098 / EORI GB 133054942000)

©Copyright 2025

Installation Instructions

12x150mm Clic Herringbone Oak

Furlong Flooring®
First choice flooring for every room

INSTALLATION OF HERRINGBONE FLOORING - FULL ADHESION METHOD

This product must be glued to the subfloor using moisture-cured urethane adhesive that has been specially formulated for installing hardwood flooring.

Always refer to the adhesive manufacturers' guidelines for how to install, the correct tools to do so and any curing and drying times. For installations where your sub floor is outside of the guidelines outlined in our sub floor Preparation section, a suitable moisture suppressant should always be used.

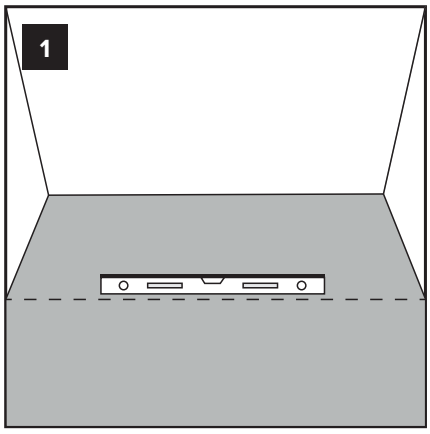

Step 1

Before beginning the installation process ensure that:

- The sub floor is suitable and leveled correctly for the above product.
- Verify moisture content of both sub floor and the planks are within the allowable limits and take note of these values.
- Check that the room temperature and relative humidity meet the specific requirements outlined in the Climate Control section.
- A suitable underlay product has been used for the room type.

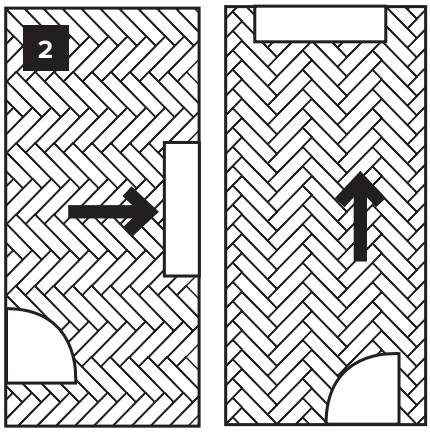

Step 2

Determine the layout of the floor and which way you'd like the pattern to flow throughout the room. Typically we recommend that the pattern should run the length of the room, but in some cases, it can be altered according to accommodate for fixed features such as a fireplace, main entranceway or light source.

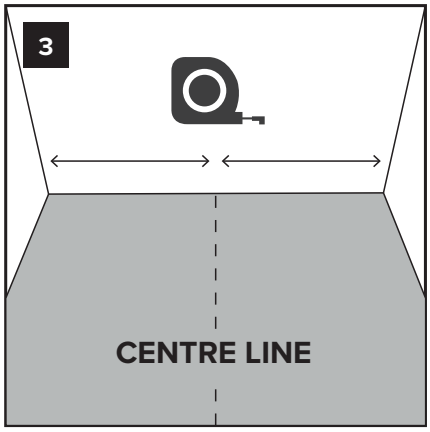

Step 3

Once the layout of your patterned flooring is agreed, start by marking a centre line across the floor in the same way the pattern will flow.

Precise measurements are essential when laying a Herringbone pattern. Always verify measurements and check row alignment frequently to ensure an accurate and even pattern is consistent across the room. Failing to do so may cause stepping between boards and a break down in the desired pattern.

At the time of writing all information is specified correctly. The company reserves the right to change specifications of this product at any time without prior notice to third parties. The photographs used in this document are only intended as a visual references. No rights can be derived from the them.

This product is imported into the United Kingdom under licence from B2BWP (Co. Number: 07996098 / EORI GB 133054942000)

©Copyright 2025

Installation Instructions

12x150mm Clic Herringbone Oak

Furlong Flooring®
First choice flooring for every room

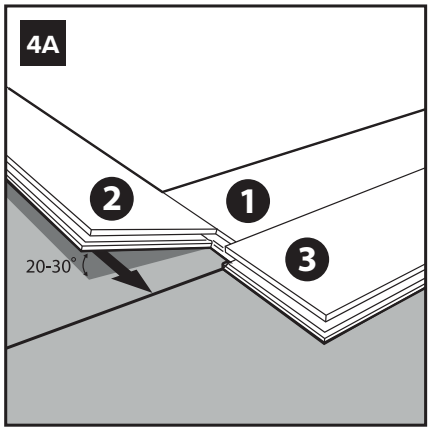

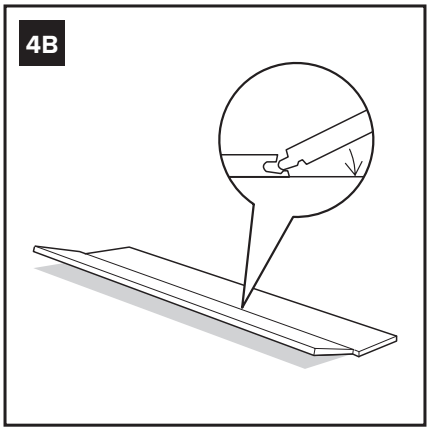

To begin the installation, start by assembling the central row using planks "1", "2", and "3". Plank "3" acts as a guide to help position planks "1" and "2" correctly at a 90* angle to each other. To join planks "1" and "3", hold them at a slight angle of around 20 to 30° and insert the tongue of plank "2" into the groove of plank "1". Ensure that the short edge of plank "3" extends around 5mm past the short edge of plank "1". Then, fit the long-side tongue of plank "2" into the short-side groove of plank "1". Slide plank "2" forward until it pushes into plank "3", and finally, lower it into position.

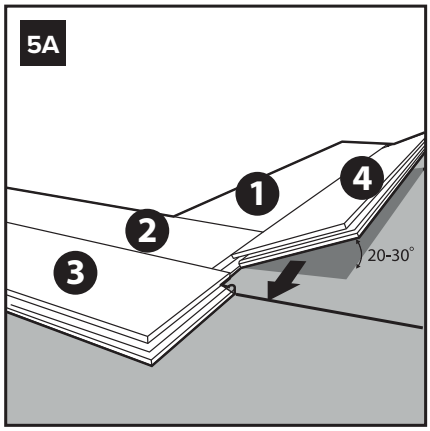

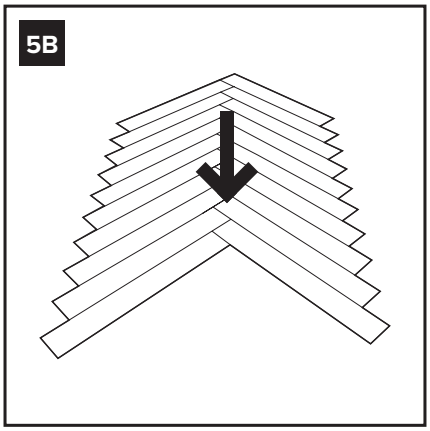

Step 5

Next, position plank "4", which will now serve the same purpose as plank "3". Lift plank "3" at an angle of approximately 20 to 30° and slide it upward until it meets plank "4". Continue this process until the entire central point of the flooring is complete. Ensure you always follow the direction indicated by the arrows in a left, right, left sequence to ensure the pattern is correct.

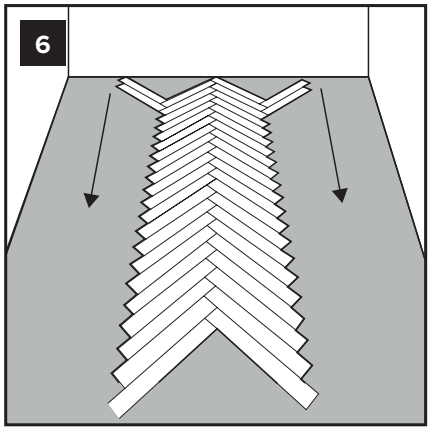

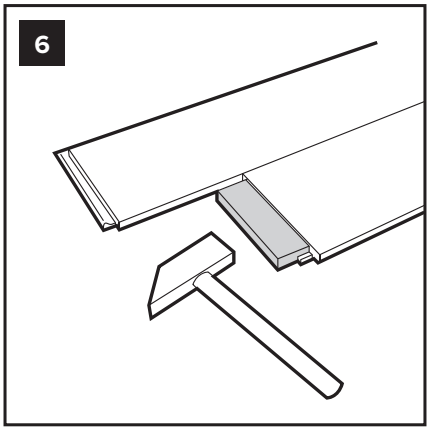

Step 6

Continue installing additional rows of full planks. We advise starting with a new row on the left side of the first V-row, followed by installing a row on the right side of the first V-row.

For each new row, always connect the long side of the new panel into the long side of the previous panel. While holding the new panel at a 20 to 30° angle, slide it until its short end reaches the installed V-row. Then, drop down the panel and tap it on the short end until it locks into the V-row. Always use a rubber hammer and a suitable tapping block for tapping.

At the time of writing all information is specified correctly. The company reserves the right to change specifications of this product at any time without prior notice to third parties. The photographs used in this document are only intended as a visual references. No rights can be derived from the them.

This product is imported into the United Kingdom under licence from B2BWP (Co. Number: 07996098 / EORI GB 133054942000)

©Copyright 2025

Installation Instructions

12x150mm Clic Herringbone Oak

Furlong Flooring®
First choice flooring for every room

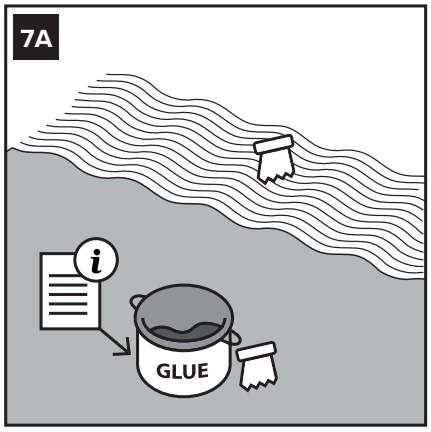

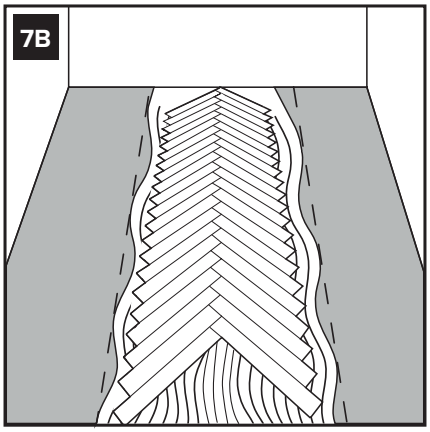

Step 7

Before applying glue to the subfloor, it is advisable to click together the first two rows of planks without adhesive. This allows for precise alignment of the wood flooring and any necessary adjustments. It might also assist by using a none residue leaving masking tape to help hold the boards together when you position on top of the adhesive.

To maintain a clean workspace, only apply glue for two rows at a time. Once the adhesive is spread, position the planks accordingly. After securing the first two rows, sit on them to apply glue for the next set. Repeat this process until the entire floor is installed.

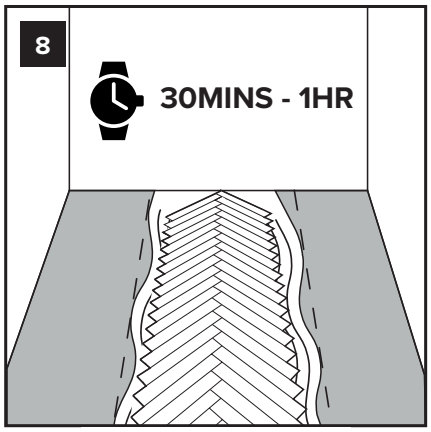

Step 8

Allow the first two rows installed on the adhesive to cure for 30min to 1 hour before you continue with your installation. This helps to prevent any movement of the boards that could lead to the floor pattern being misaligned for later in the installation.

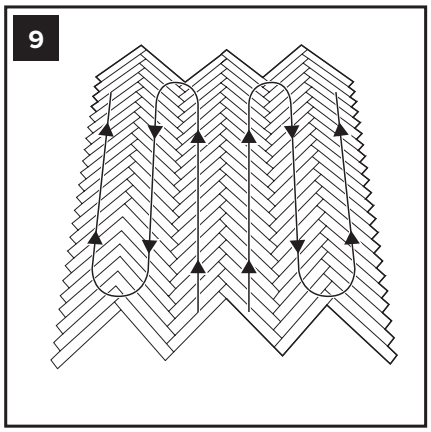

Step 9

Complete all remaining rows where you can install as full planks. Follow the arrow direction so the planks are installed in the correct order. Always make sure to tap your joints together fully to prevent any run out in the floors pattern.

At the time of writing all information is specified correctly. The company reserves the right to change specifications of this product at any time without prior notice to third parties. The photographs used in this document are only intended as a visual references. No rights can be derived from the them.

This product is imported into the United Kingdom under licence from B2BWP (Co. Number: 07996098 / EORI GB 133054942000)

©Copyright 2025

Installation Instructions

12x150mm Clic Herringbone Oak

Furlong Flooring®
First choice flooring for every room

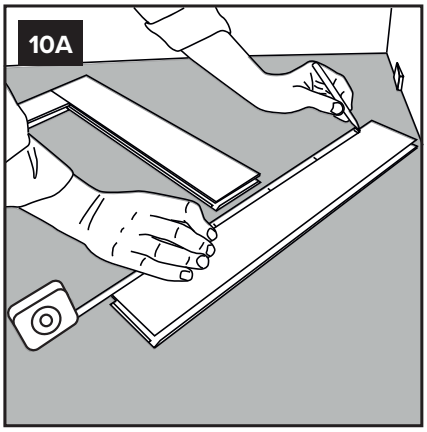

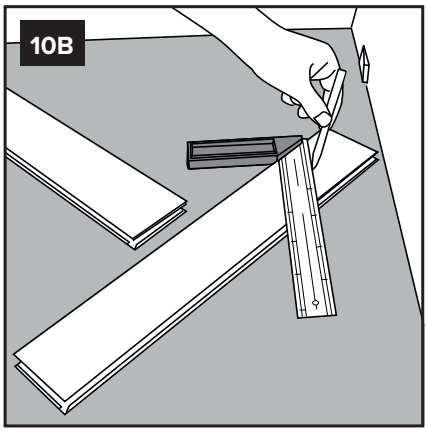

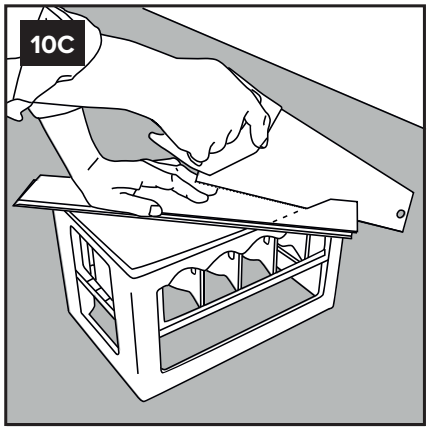

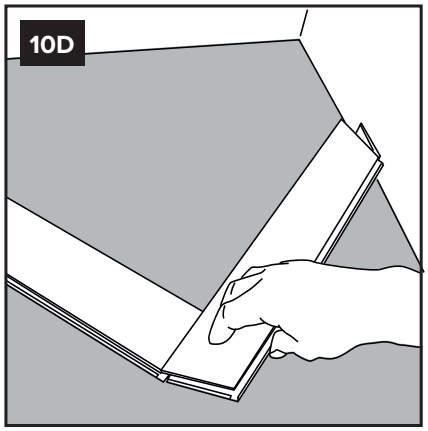

Step 10 A / B / C / D

Once the majority of the planks are installed, and you're ready to backfill the cut boards around the perimeter of the room. Work around the room and measure each board individually (10A), use a straight edge to mark your cut line (10B) and cut using a saw (10C) filling in each of the gaps as you go (10D).

Remember only to apply enough adhesive for the smaller section to avoid spillage onto the freshly laid planks.

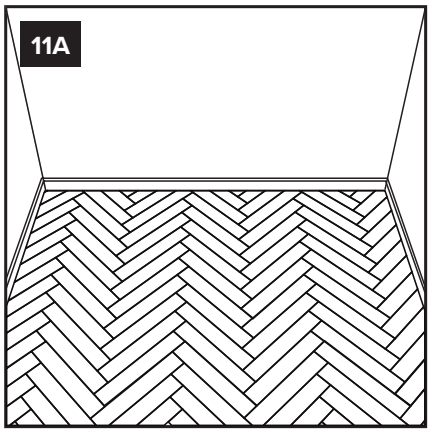

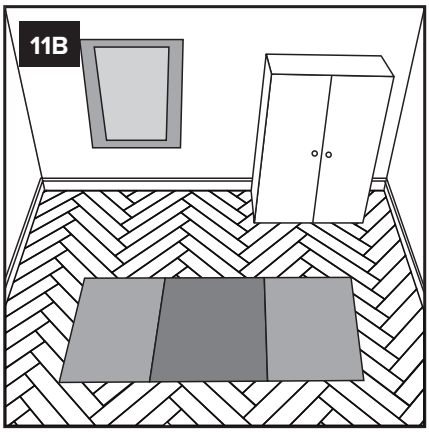

Step 11 A / B

Install mouldings and profiles as required. Ensure skirting or mouldings are fixed to the wall and not the floor.

Allow 24 hours curing time before moving any furniture or appliances onto the newly laid floor.

At the time of writing all information is specified correctly. The company reserves the right to change specifications of this product at any time without prior notice to third parties. The photographs used in this document are only intended as a visual references. No rights can be derived from the them.

This product is imported into the United Kingdom under licence from B2BWP (Co. Number: 07996098 / EORI GB 133054942000)

©Copyright 2025

Installation Instructions

12x150mm Clic Herringbone Oak

Furlong Flooring®
First choice flooring for every room

INSTALLATION OF 12MM HERRINGBONE FLOORING WITH THE FLOATING FLOOR METHOD USING UNICLIC L2G TECHNOLOGY

The second technology available to fit your flooring in a domestic locations up to 35m2 (in 1 single room) is the Unilin patented L2G system that is globally recognised for its simplicity.

Please note: for areas made up of more than 1 room each location must be installed completely separately with no joining between locations. A suitable vapor barrier and professional flooring underlayment with a minimum 2mm foam used.

Please follow the room layout guidelines displayed in steps 1-6 and 10-11 for a perfect click installation.

SCAN HERE FOR MORE INFORMATION ON USING UNICLIC L2G TECHNOLOGY.

At the time of writing all information is specified correctly. The company reserves the right to change specifications of this product at any time without prior notice to third parties. The photographs used in this document are only intended as a visual references. No rights can be derived from the them.

This product is imported into the United Kingdom under licence from B2BWP (Co. Number: 07996098 / EORI GB 133054942000)

©Copyright 2025

Installation Instructions

12x150mm Clic Herringbone Oak

Furlong Flooring®
First choice flooring for every room

UK WARRANTY

1. We are responsible for manufacturing defects.
2. Our 12mm Clic Herringbone Flooring must be installed correctly according to the outlined above instructions. The warranty covers regular use. The warranty does not include the use of this product in damp and wet spaces, such as conservatories, bathrooms and kitchens.
3. Planks showing visible defects should not be used as part of the installation. It is the responsibility of the owner/fitter to deselect these boards at the time of installation. These boards are to be allowed for in the 5% waste tolerance. Boards with visible defects that are installed are excluded from this warranty. Colour and grade de-selection is not allowed for, as this is a personal choice and not a defect in the manufacturing of the product.
4. Always check all boards to ensure the board dimensions are accurate before installing. Off-cut boards should not always be classed as waste, short or longer pieces can both be used around the perimeter of the floor if permitted.
5. Finished flooring, i.e. lacquered, stained, oiled, brushed, or other finished flooring is subject to normal wear and shall not be covered by this warranty, i.e. if you don't maintain the floor correctly, the warranty is null and void.
6. Excluded under this warranty are scratches, heavy impacts, humidity, and damage caused by incorrect use or lack of correct maintenance.
7. If you have a defect, which falls under the conditions mentioned in this warranty, you should report this to your dealer in writing within 14 days after detecting the defect. In your letter, you should include a copy of the original invoice.
8. This warranty only relates to the planks supplied, and consequently, it does not include labour costs, the costs of additional material and any other consequential loss.
9. In case of a dispute arising from the warranty, either party may call upon an independent expert to render binding advice. If this clause is applicable, the cost is to be agreed in writing with all parties involved in advance.
10. Where the warranty applies, we or our distributors will replace the faulty product. In case the product in question is no longer available, we will ensure replacement of an alternative product of the same quality.
11. This warranty shall apply only to the original owner/ purchaser of the wood floor.

WARRANTY WILL NOT BE APPLICABLE IN CASE OF:

1. The floor has not been installed following the correct methods outlined in the instructions by a qualified installer.
2. The faults were noticed and ignored before the floor was installed.
3. Defects and faults having arisen due to dampness or water damage or any other causes as a result of force majeure.
4. Defects and faults have been caused by improper use or negligence and failure to use the product for its intended purpose, as well as having been caused by having disregarded the instructions for installation, use and maintenance.
5. Visual faults having arisen as a result of any deformation of the boards due to changed climate conditions, any variations in colour due to the influence of sunlight and the effects of normal ageing and wear and tear of the finishing coat.
6. Stains or mechanical damage to the surface (scratches and dents) resulting from improper treatment during transport, storage and any damage caused by stiletto heels, furniture, stones, sand and pets.

MANUFACTURING TOLERANCE
ENGINEERED HARDWOOD FLOORS ARE A NATURAL PRODUCT AND AS SUCH ARE SUBJECT TO MANY VARIANCES IN COLOUR AND CHARACTER IN EACH INDIVIDUAL PIECE OF FLOORING, WE ALWAYS THEREFORE RECOMMEND YOU WORK FROM 3-4 PACKS OF FLOORING AT A TIME IN ORDER TO GET THE BEST NATURAL COLOUR MIX. AS SUCH A TOLERANCE OF 5% SHOULD BE ALLOWED FOR THE DESELECTION OF ANY MATERIAL DEEMED UNSUITABLE FOR INSTALLATION. THIS PRODUCT IS PRODUCED WITH A MANUFACTURING TOLERANCE OF + OR – 1.5% ON THE DIMENSION OF THE BOARD AND IN LINE WITH SPECIFIED TIMBER MANUFACTURING GUIDELINES, AS SUCH ANY ITEMS OUT OF TOLERANCE SHOULD BE DISMISSED AS PART OF THE 5% MANUFACTURING TOLERANCE.

UK TR UK CA **EN14342:2013**
MADE IN PRC

At the time of writing all information is specified correctly. The company reserves the right to change specifications of this product at any time without prior notice to third parties. The photographs used in this document are only intended as a visual references. No rights can be derived from the them.

This product is imported into the United Kingdom under licence from B2BWP (Co. Number: 07996098 / EORI GB 133054942000)

©Copyright 2025